Via Tangenziale, 22 - 62010 Montecosaro - Macerata - Italy
www.vittorazi.com - info@vittorazi.com
T.F. +39.0733.866585 Partita I.V.A. 01376410435

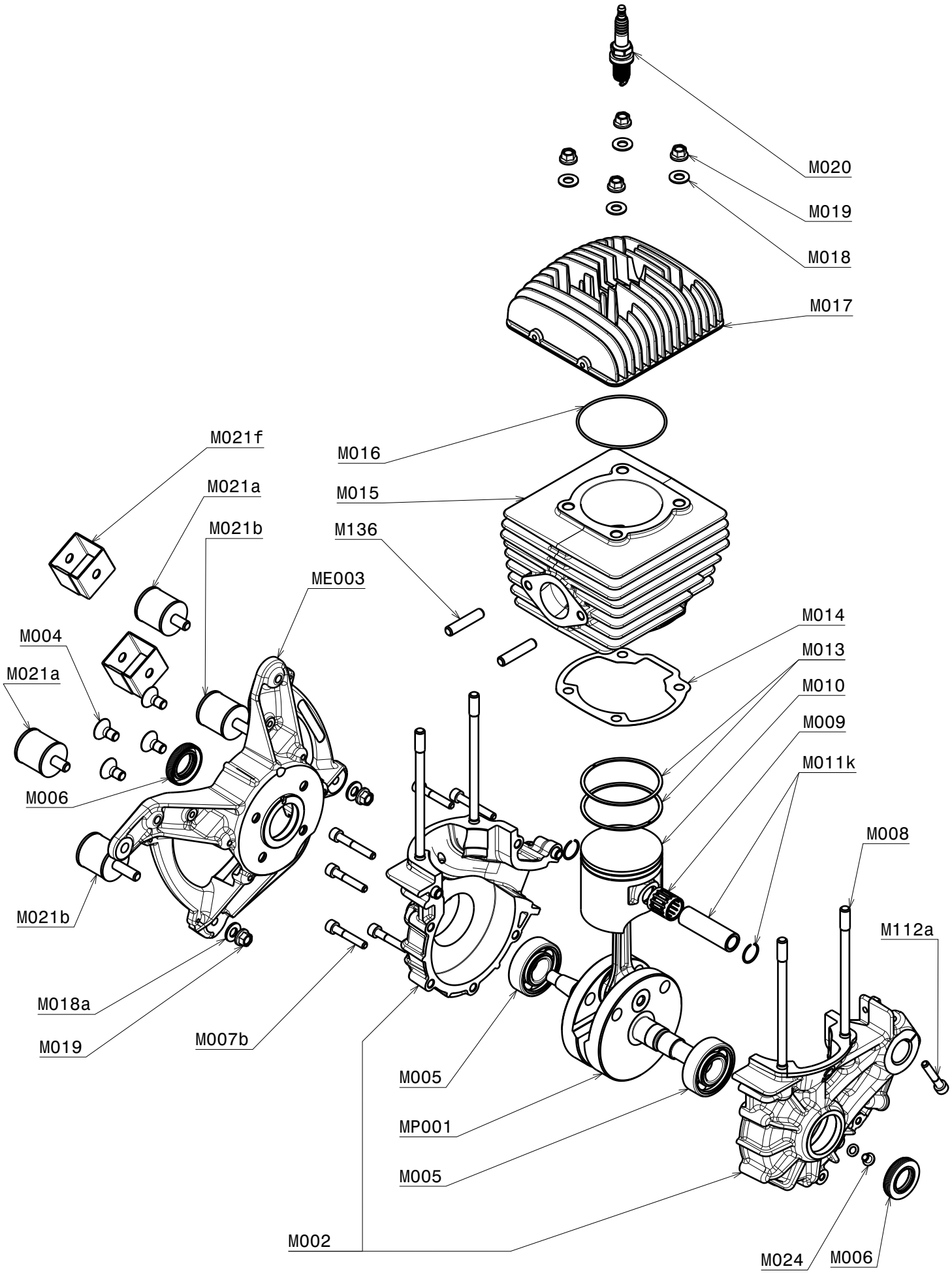

Engine: Moster 185 Plus MY22			I.P.C. Number 0048
Version: Dual	Group: Thermal Unit	Update: Feb 2022	Page: 1/4

vittorazi MOTORS
Via Tangenziale, 22 - 62010 Montecosaro - Macerata - Italy
www.vittorazi.com - info@vittorazi.com
T.F. +39.0733.866585 Partita I.V.A. 01376410435

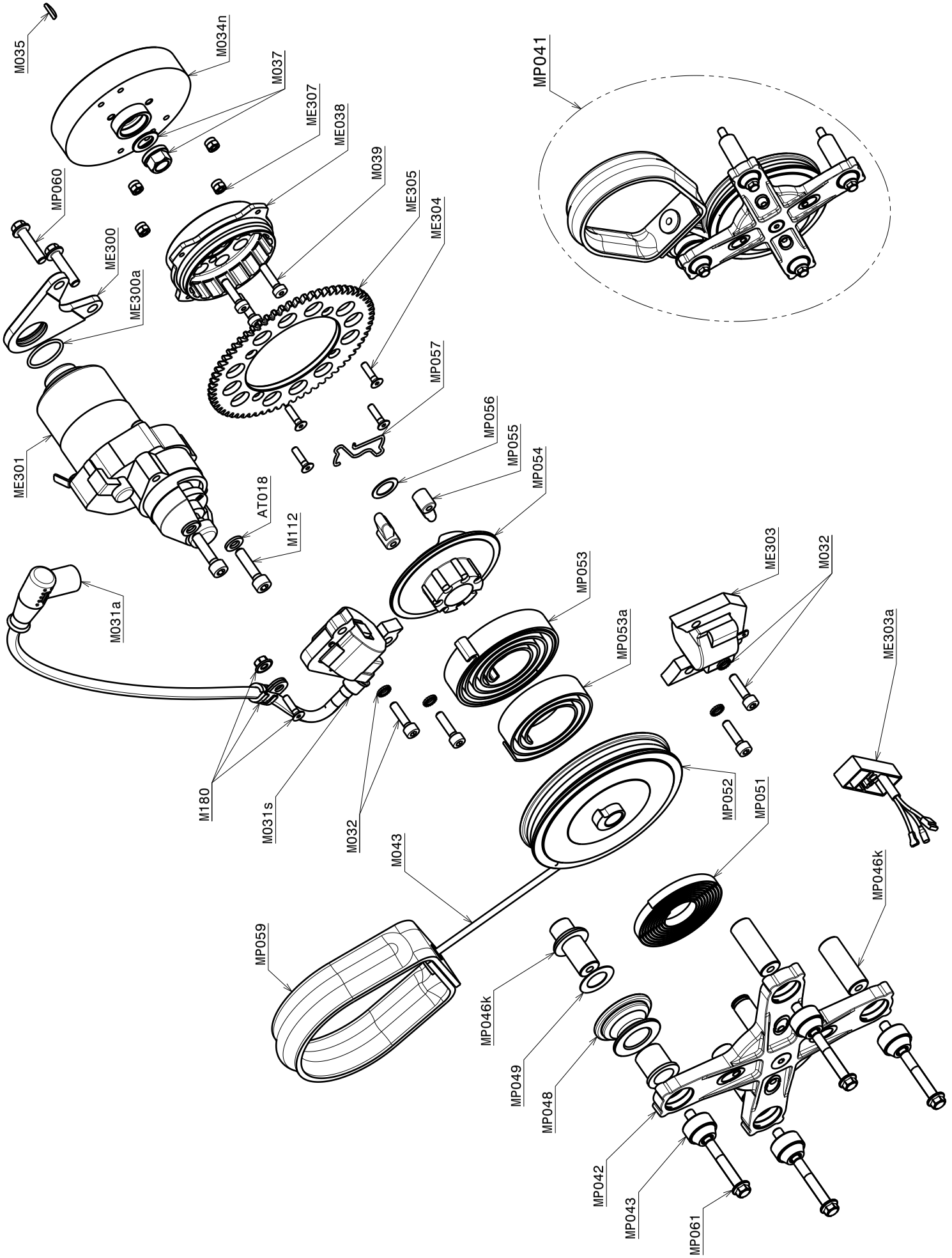

Engine: Moster 185 Plus MY22		I.P.C. Number 0048	
Version: Dual	Group: Dual starter	Update: Feb 2022	Page: 2/4

Via Tangenziale, 22 - 62010 Montecosaro - Macerata - Italy
www.vittorazi.com - info@vittorazi.com
T.F. +39.0733.866585 Partita I.V.A. 01376410435

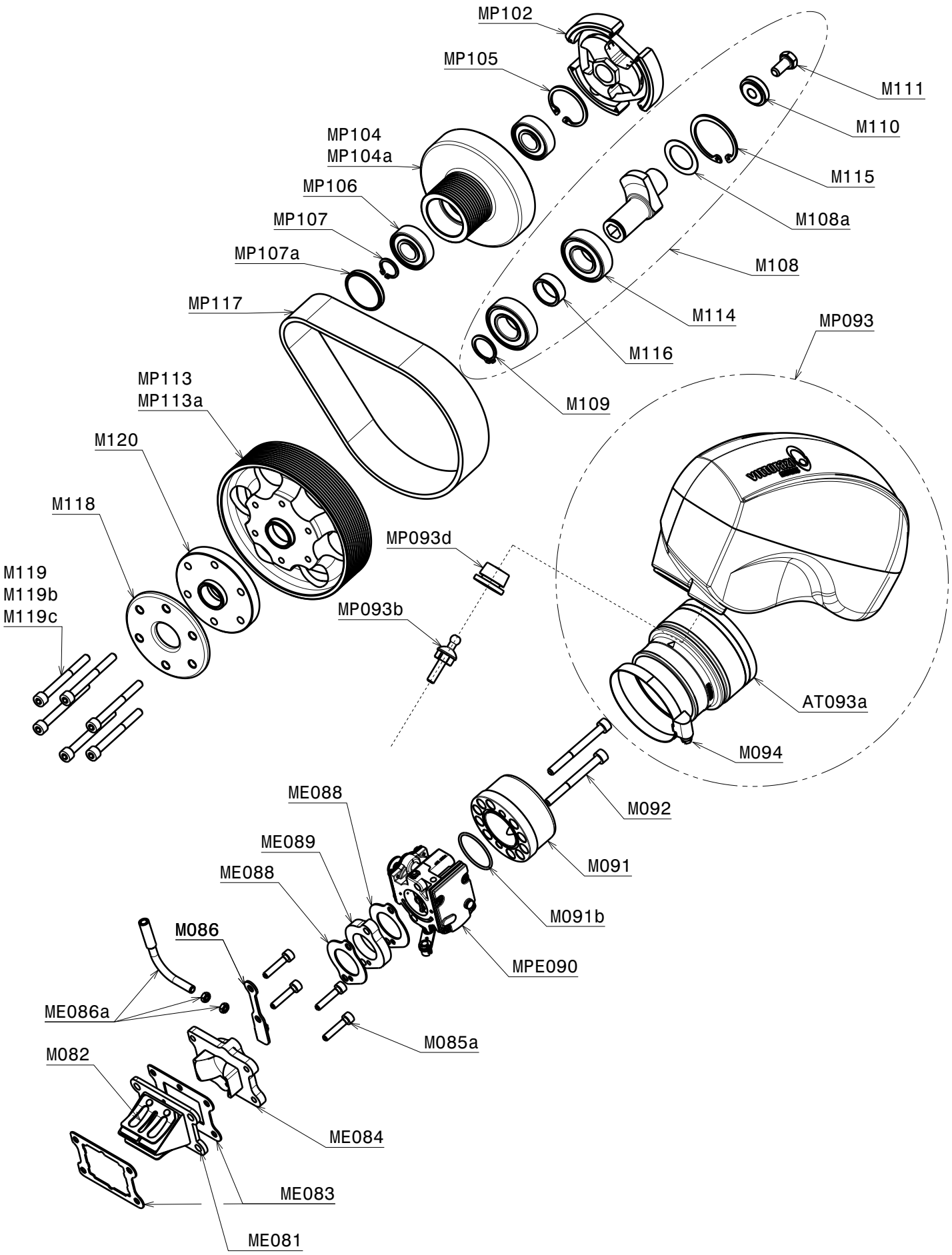

Engine: Moster 185 Plus MY22			I.P.C. Number 0048
Version: Dual	Group: Reduction drive/Aspiration	Update: Feb 2022	Page: 3/4

Via Tangenziale, 22 - 62010 Montecosaro - Macerata - Italy
www.vittorazi.com - info@vittorazi.com
T.F. +39.0733.866585 Partita I.V.A. 01376410435

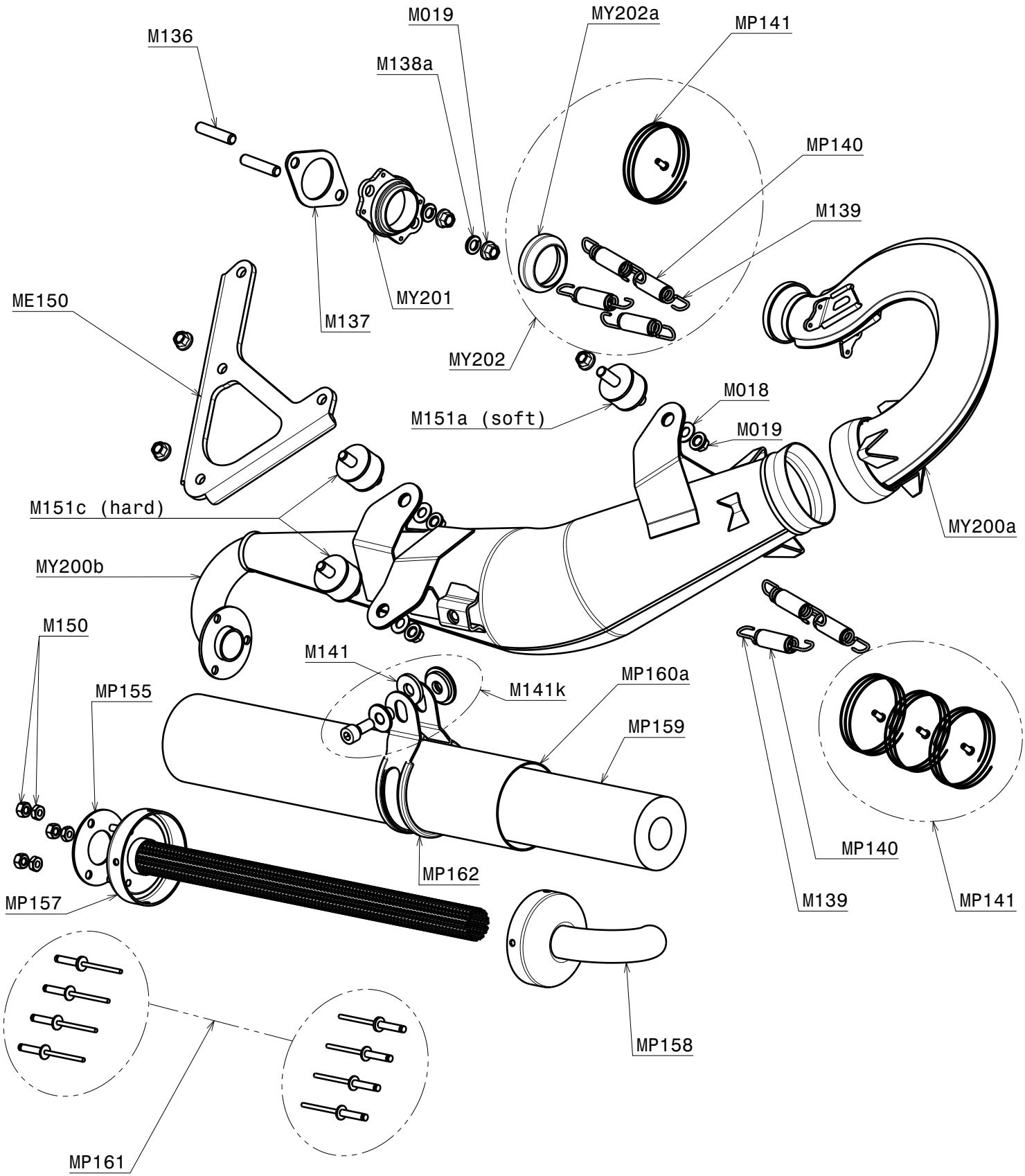

Engine: Moster 185 Plus MY22			I.P.C. Number 0048
Version: Dual	Group: Exhaust	Update: Feb 2022	Page: 4/4